REV.	RECORD/DATE	BY	APPD.
△			

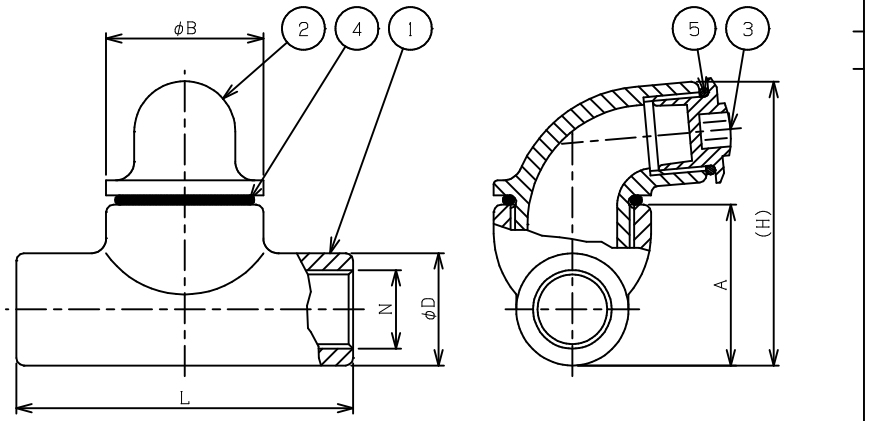

TYPE	N	φD	A	φB	(H)	L	WEIGHT (kg)
SFG-16H	PF 1/2	30	43	42	75	90	0.6
SFG-22H	PF 3/4	35	48	42	80	90	0.6
SFG-28H	PF 1	42	56	42	88	100	0.6
SFG-36H	PF1 1/4	52	67	50	108	120	1.0
SFG-42H	PF1 1/2	60	75	50	116	130	1.1
SFG-54H	PF 2	72	87	50	128	150	1.7
SFG-70H	PF2 1/2	88	110	75	161	165	3.3
SFG-82H	PF 3	102	125	75	176	180	4.3
SFG-92H	PF3 1/2	114	132	100	187	200	6.5
SFG-104H	PF 4	130	151	100	206	220	7.6

	5	"O" RING	NBR	1	
	4	"O" RING	NBR		
	3	CLOSE UP PLUG	ADC12	1	
	2	FEED HOLE	FC150/200	1	
	1	BODY	FC150/200	1	
STANDARD	PAT.No.	PARTS NAME	MATERIAL	QUANTITY	REMARKS

MEASU.	APPROVED Y.Kanazawa	CHECKED T.Kato	SCALE /NT	TYPE SFG-16H~104H
TREAT. ZINC HOT DIP GALVANIZINGS	DESIGNED K.Shimizu	DRAWN K.Shimizu	TITLE FLAMEPROOF TYPE SEALING FITTING	
PROJE.	SHIMADA ELECTRIC CO., LTD.		DRAWING No. FC000029E	REV. △