REV.	RECORD/DATE	BY	APPD.
1	CHANGE. SEP/06/2005	T.Kato	K.Koshigoe
2	CHANGE JAN/07/2013	Y.Suzuki	Y.Kanazawa
3	CHANGE. JUN/22/2015	K.Shimizu	Y.Kanazawa

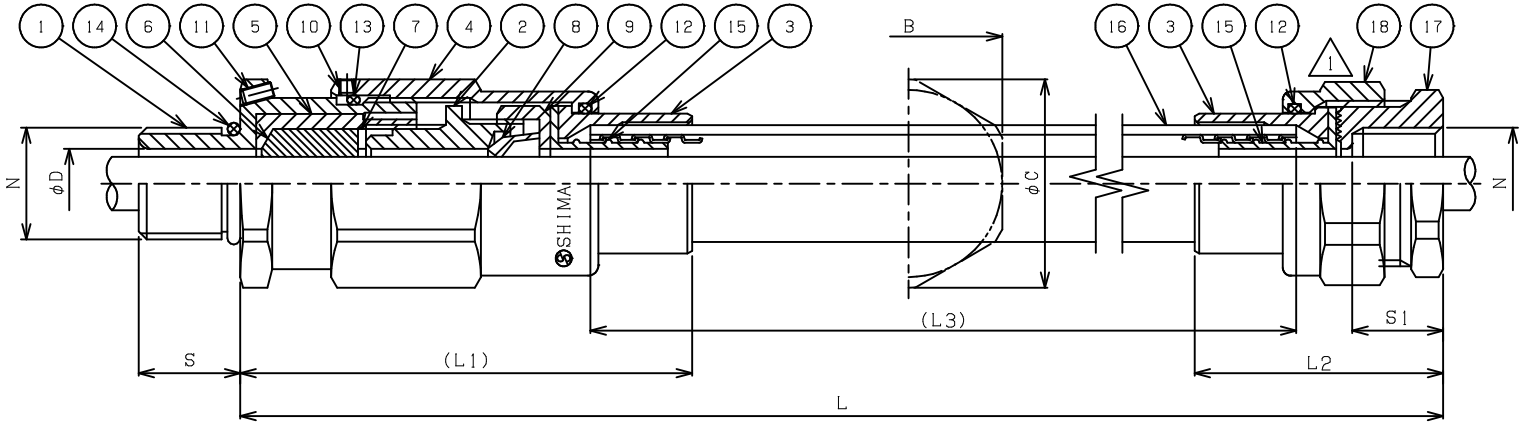

d2 ExdⅡB

TYPE	N	No.	RANGE OF APPLICABLE(φ)	φD	S	S1	B	φC	(L1)	L2	(L3)	WEIGHT (kg)
SXV-□16LF	PF1/2	2	8.0~ 9.9	13	19	17	35	39	85	46.5	906	0.9
		1	10.0~12.0									
SXV-□22LF	PF3/4	2	12.0~13.9	17	19	17	41	45	88	49.5	906	1.2
		1	14.0~16.0									
SXV-□28LF	PF 1	2	16.0~17.9	22	23	21	46	50	96	56	895	1.6
		1	18.0~20.0									

15	SETTER	ZDC	2	
14	"O" RING	NBR	1	
13	"O" RING	NBR	1	
12	"O" RING	NBR	2	
11	LOCK SCREW	SUS304	1	
10	LOCK SCREW	SUS304	1	
9	CLAMP NUT	ADC	1	
8	CLAMP RING	POM	1	
7	WASHER	SUS304	1	
6	PACKING	CR	1	
5	PACKING CASE	C3604	1	
4	UNION NUT	C3604	1	
3	V.COUPLING	C3604	2	
2	PACKING GLAND	ADC/C3604	1	
1	M.SCREW	C3604	1	

NOTE

STANDARD "L" LENGTH 500/700/1000mm.

1 "L3" AND "WEIGHT" SHALL BE APPLIED TO L=1000mm TYPE.

18	SHORT UNION	ZDC	1	
17	F.SCREW	C3604	1	
16	FLEXIBLE TUBE	PVC	1	

STANDARD	PAT.No.	PARTS NAME	MATERIAL	QUANTITY	REMARKS
MEASU.	APPROVED K.Koshigoe	CHECKED Y.Kanazawa	SCALE /NT	TYPE SXV-□16LF~□28LF	
TREAT. Ni PLATING	DESIGNED N.Akatsuka	DRAWN N.Akatsuka	TITLE FLAMEPROOF TYPE PACKING FLEXIBLE COUPLING		
PROJE.	SHIMADA ELECTRIC CO., LTD.		DRAWING No. HB101102E	REV. 3	

REV.	RECORD/DATE	BY	APPD.
1	CHANGE JAN/07/2013	Y.Suzuki	Y.Kanazawa
2	CHANGE. JUN/22/2015	K.Shimizu	Y.Kanazawa

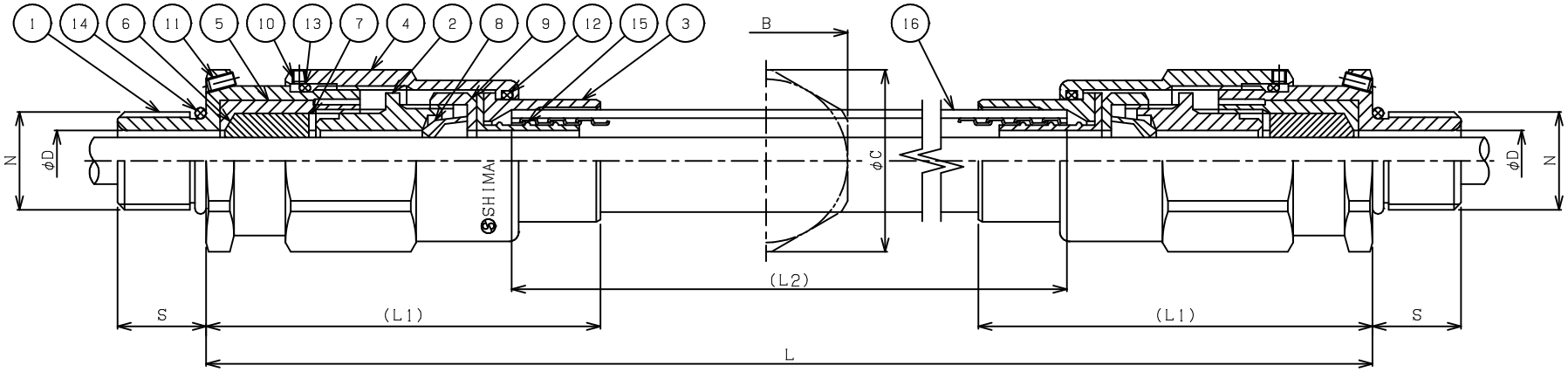

d2 ExdⅡB

TYPE	N	No.	RANGE OF APPLICABLE(φ)	φD	S	B	φC	(L1)	(L2)	WEIGHT (kg)
SXV-□16LL	PF1/2	2	8.0~ 9.9	13	19	35	39	85	868	1.3
		1	10.0~12.0							
SXV-□22LL	PF3/4	2	12.0~13.9	17	19	41	45	88	868	1.7
		1	14.0~16.0							
SXV-□28LL	PF 1	2	16.0~17.9	22	23	46	50	96	856	2.1
		1	18.0~20.0							

PAT.No.	PARTS NAME	MATERIAL	QUANTITY	REMARKS
15	SETTER	ZDC	2	
14	"O" RING	NBR	2	
13	"O" RING	NBR	2	
12	"O" RING	NBR	2	
11	LOCK SCREW	SUS304	2	
10	LOCK SCREW	SUS304	2	
9	CLAMP NUT	ADC	2	
8	CLAMP RING	POM	2	
7	WASHER	SUS304	2	
6	PACKING	CR	2	
5	PACKING CASE	C3604	2	
4	UNION NUT	C3604	2	
3	V.COUPLING	C3604	2	
2	PACKING GLAND	ADC/C3604	2	
1	M.SCREW	C3604	2	

NOTE

STANDARD "L" LENGTH 500/700/1000mm.
"L2" AND "WEIGHT" SHALL BE APPLIED TO L=1000mm TYPE.

16	FLEXIBLE TUBE	PVC	1	

STANDARD				
MEASU.	APPROVED K.Koshigoe	CHECKED Y.Kanazawa	SCALE /NT	TYPE SXV-□16LL~□28LL
TREAT. Ni PLATING	DESIGNED N.Akatsuka	DRAWN N.Akatsuka	TITLE FLAMEPROOF TYPE PACKING FLEXIBLE COUPLING	
PROJE.	SHIMADA ELECTRIC CO., LTD.		DRAWING No. HB10148E	REV. 2

REV.	RECORD/DATE	BY	APPD.
1	CHANGE. SEP/06/2005	T.Kato	K.Koshigoe
2	CHANGE JAN/07/2013	Y.Suzuki	Y.Kanazawa
3	CHANGE. JUN/22/2015	K.Shimizu	Y.Kanazawa

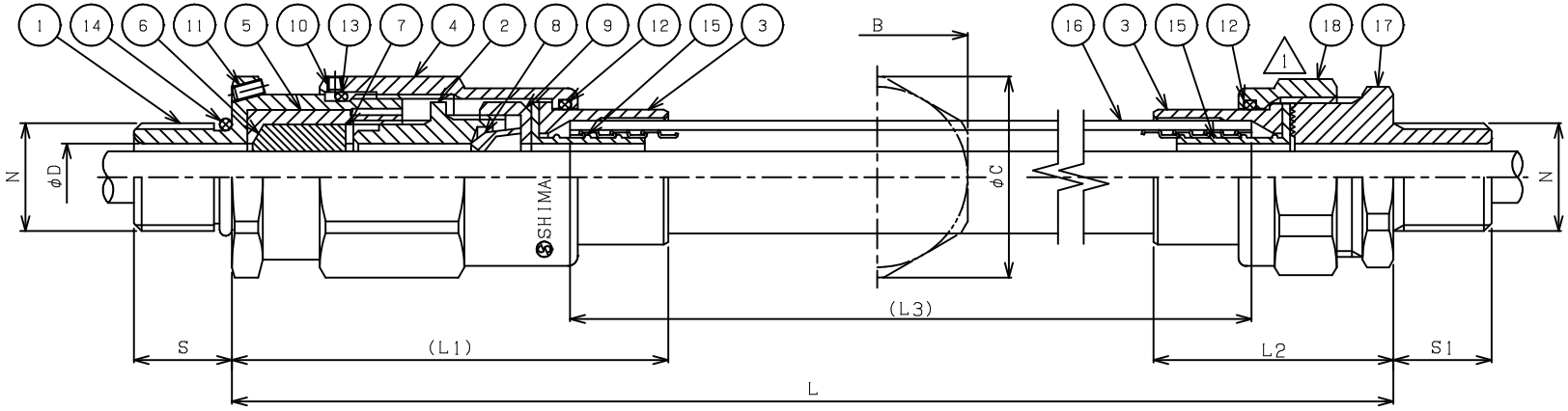

d2 ExdⅡB

TYPE	N	No.	RANGE OF APPLICABLE(φ)	φD	S	S1	B	φC	(L1)	L2	(L3)	WEIGHT (kg)
SXV-□16LM	PF1/2	2	8.0~ 9.9	13	19	19	35	39	85	46.5	906	1.0
		1	10.0~12.0									
SXV-□22LM	PF3/4	2	12.0~13.9	17	19	19	41	45	88	49.5	906	1.2
		1	14.0~16.0									
SXV-□28LM	PF 1	2	16.0~17.9	22	23	23	46	50	96	56	895	1.6
		1	18.0~20.0									

15	SETTER	ZDC	2	
14	"O" RING	NBR	1	
13	"O" RING	NBR	1	
12	"O" RING	NBR	2	
11	LOCK SCREW	SUS304	1	
10	LOCK SCREW	SUS304	1	
9	CLAMP NUT	ADC	1	
8	CLAMP RING	POM	1	
7	WASHER	SUS304	1	
6	PACKING	CR	1	
5	PACKING CASE	C3604	1	
4	UNION NUT	C3604	1	
3	V.COUPLING	C3604	2	
2	PACKING GLAND	ADC/C3604	1	
1	M.SCREW	C3604	1	

NOTE

STANDARD "L" LENGTH 500/700/1000mm.

1 "L3" AND "WEIGHT" SHALL BE APPLIED TO L=1000mm TYPE.

18	SHORT UNION	ZDC	1	
17	M.SCREW	C3604	1	
16	FLEXIBLE TUBE	PVC	1	

STANDARD	PAT.No.	PARTS NAME	MATERIAL	QUANTITY	REMARKS
MEASU.	APPROVED K.Koshigoe	CHECKED Y.Kanazawa	SCALE /NT	TYPE SXV-□16LM~□28LM	
TREAT. Ni PLATING	DESIGNED N.Akatsuka	DRAWN N.Akatsuka	TITLE FLAMEPROOF TYPE PACKING FLEXIBLE COUPLING		
PROJE.	SHIMADA ELECTRIC CO., LTD.		DRAWING No. HB10126E	REV. 3	

REV.	RECORD/DATE	BY	APPD.
1	CHANGE. SEP/06/2005	T.Kato	K.Koshigoe
2	CHANGE JAN/07/2013	Y.Suzuki	Y.Kanazawa

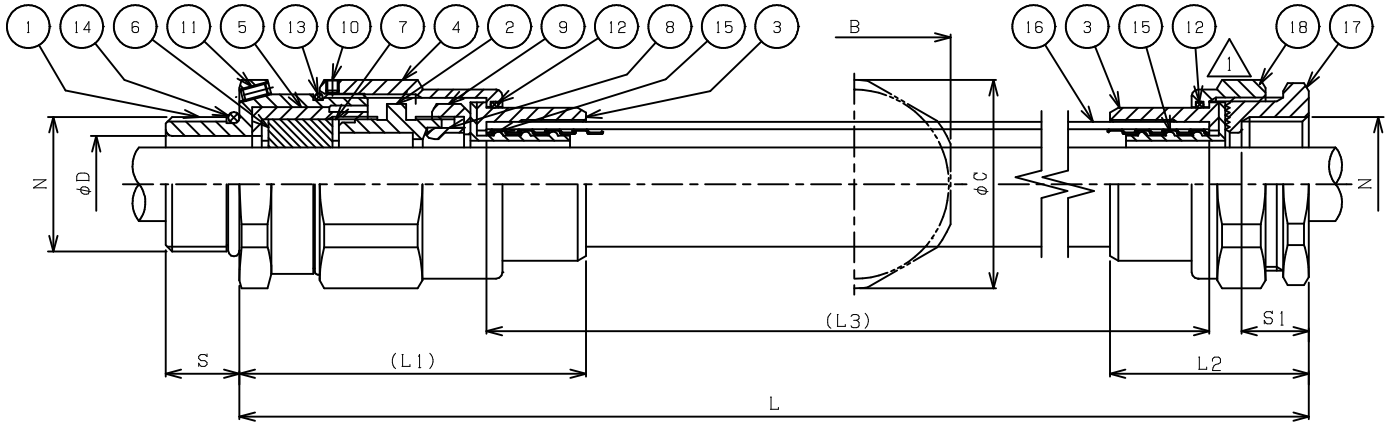

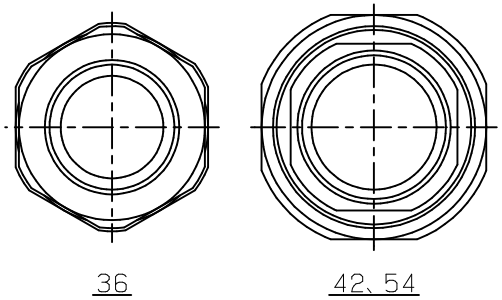

d2 ExdⅡB

TYPE	N	No.	RANGE OF APPLICABLE(φ)	φD	S	S1	B	φC	(L1)	L2	(L3)	WEIGHT (kg)
SXV-□36LF	PF1 1/4	5	20.0~20.9	30	23	21	60	65	108	62	891	3.3
		4	21.0~21.9									
		3	22.0~22.9									
		2	23.0~23.9									
		1	24.0~25.0									
SXV-□42LF	PF1 1/2	4	25.0~25.9	36	23	25	71	75	115	70	882	5.0
		3	26.0~26.9									
		2	27.0~27.9									
		1	28.0~29.0									
SXV-□54LF	PF 2	8	29.0~29.9	48	23	25	88	93	125	73	875	7.6
		7	30.0~30.9									
		6	31.0~31.9									
		5	32.0~32.9									
		4	33.0~33.9									
		3	34.0~34.9									
		2	35.0~35.9									
		1	36.0~37.0									

NOTE

STANDARD "L" LENGTH 500/700/1000mm.

1 "L3" AND "WEIGHT" SHALL BE APPLIED TO L=1000mm TYPE.

2	18	SHORT UNION	CAC406 (BC6)	1	
2	17	F.SCREW	CAC406 (BC6)	1	
2	16	FLEXIBLE TUBE	PVC	1	
	15	SETTER	SCS	2	
	14	"O" RING	NBR	1	
	13	"O" RING	NBR	1	
	12	"O" RING	NBR	2	
	11	LOCK SCREW	SUS304	1	
	10	LOCK SCREW	SUS304	1	
	9	CLAMP NUT	C3604	1	
	8	CLAMP RING	POM	1	
	7	WASHER	SUS304	2	
	6	PACKING	CR	1	
	5	PACKING CASE	CAC406 (BC6)	1	
2	4	UNION NUT	CAC406 (BC6)	1	
	3	V.COUPLING	CAC406 (BC6)	2	
	2	PACKING GLAND	C3604	1	
2	1	M.SCREW	CAC406 (BC6)	1	

STANDARD	PAT.No.	PARTS NAME	MATERIAL	QUANTITY	REMARKS
MEASU.	APPROVED K.Koshigoe	CHECKED Y.Kanazawa		SCALE /NT	TYPE SXV-□36LF~□54LF
TREAT. Ni PLATING	DESIGNED N.Akatsuka	DRAWN N.Akatsuka		TITLE FLAMEPROOF TYPE PACKING FLEXIBLE COUPLING	
PROJE.	SHIMADA ELECTRIC CO., LTD.			DRAWING No. HB10103E	REV. 2

REV.	RECORD/DATE	BY	APPD.
1	CHANGE JAN/07/2013	Y.Suzuki	Y.Kanazawa

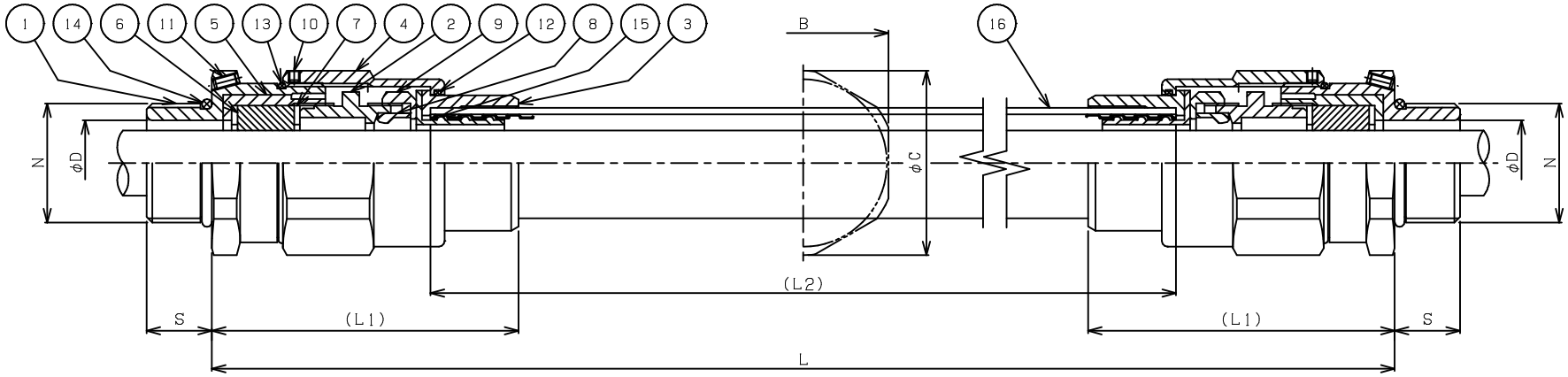

d2 ExdⅡB

TYPE	N	No.	RANGE OF APPLICABLE(φ)	φD	S	B	φC	(L1)	(L2)	WEIGHT (kg)
SXV-□36LL	PF1 1/4	5	20.0~20.9	30	23	60	65	108	846	4.3
		4	21.0~21.9							
		3	22.0~22.9							
		2	23.0~23.9							
		1	24.0~25.0							
SXV-□42LL	PF1 1/2	4	25.0~25.9	36	23	71	75	115	838	6.0
		3	26.0~26.9							
		2	27.0~27.9							
		1	28.0~29.0							
SXV-□54LL	PF 2	8	29.0~29.9	48	23	88	93	125	824	9.1
		7	30.0~30.9							
		6	31.0~31.9							
		5	32.0~32.9							
		4	33.0~33.9							
		3	34.0~34.9							
		2	35.0~35.9							
		1	36.0~37.0							

STANDARD	PAT.No.	PARTS NAME	MATERIAL	QUANTITY	REMARKS
15		SETTER	SCS	2	
14		"O" RING	NBR	2	
13		"O" RING	NBR	2	
12		"O" RING	NBR	2	
11		LOCK SCREW	SUS304	2	
10		LOCK SCREW	SUS304	2	
9		CLAMP NUT	C3604	2	
8		CLAMP RING	POM	2	
7		WASHER	SUS304	4	
6		PACKING	CR	2	
5		PACKING CASE	CAC406 (BC6)	2	
1 4		UNION NUT	CAC406 (BC6)	2	
3		V.COUPLING	CAC406 (BC6)	2	
2		PACKING GLAND	C3604	2	
1 1		M.SCREW	CAC406 (BC6)	2	

NOTE

STANDARD "L" LENGTH 500/700/1000mm.
"L2" AND "WEIGHT" SHALL BE APPLIED TO L=1000mm TYPE.

16	FLEXIBLE TUBE	PVC	1		

MEASU.	APPROVED K.Koshigoe	CHECKED Y.Kanazawa	SCALE /NT	TYPE SXV-□36LL~□54LL
TREAT. Ni PLATING	DESIGNED N.Akatsuka	DRAWN N.Akatsuka	TITLE FLAMEPROOF TYPE PACKING FLEXIBLE COUPLING	
PROJE.	SHIMADA ELECTRIC CO., LTD.		DRAWING No. HB10149E	REV. 1

REV.	RECORD/DATE	BY	APPD.
1	CHANGE. SEP/06/2005	T.Kato	K.Koshigoe
2	CHANGE JAN/07/2013	Y.Suzuki	Y.Kanazawa

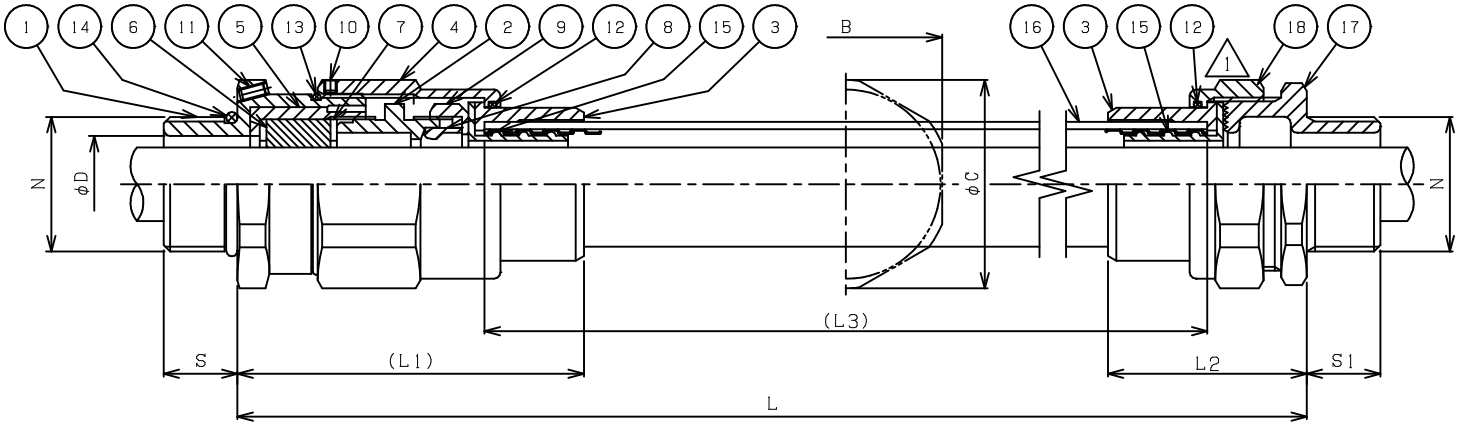

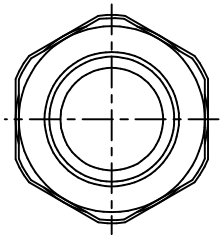

36

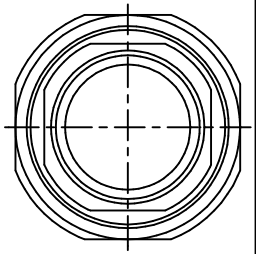

42、54

d2 ExdⅡB

TYPE	N	No.	RANGE OF APPLICABLE(φ)	φD	S	S1	B	φC	(L1)	L2	(L3)	WEIGHT (kg)
SXV-□36LM	PF11/4	5	20.0~20.9	30	23	23	60	65	108	62	891	3.4
		4	21.0~21.9									
		3	22.0~22.9									
		2	23.0~23.9									
		1	24.0~25.0									
SXV-□42LM	PF11/2	4	25.0~25.9	36	23	23	71	75	115	70	882	5.1
		3	26.0~26.9									
		2	27.0~27.9									
		1	28.0~29.0									
SXV-□54LM	PF 2	8	29.0~29.9	48	23	23	88	93	125	73	875	7.7
		7	30.0~30.9									
		6	31.0~31.9									
		5	32.0~32.9									
		4	33.0~33.9									
		3	34.0~34.9									
		2	35.0~35.9									
		1	36.0~37.0									

NOTE

STANDARD "L" LENGTH 500/700/1000mm.

1 "L3" AND "WEIGHT" SHALL BE APPLIED TO L=1000mm TYPE.

	STANDARD	PAT.No.	PARTS NAME	MATERIAL	QUANTITY	REMARKS
2	18		SHORT UNION	CAC406 (BC6)	1	
2	17		M.SCREW	CAC406 (BC6)	1	
2	16		FLEXIBLE TUBE	PVC	1	
2	15		SETTER	SCS	2	
	14		"O" RING	NBR	1	
	13		"O" RING	NBR	1	
	12		"O" RING	NBR	2	
	11		LOCK SCREW	SUS304	1	
	10		LOCK SCREW	SUS304	1	
	9		CLAMP NUT	C3604	1	
	8		CLAMP RING	POM	1	
	7		WASHER	SUS304	2	
	6		PACKING	CR	1	
	5		PACKING CASE	CAC406 (BC6)	1	
2	4		UNION NUT	CAC406 (BC6)	1	
	3		V.COUPLING	CAC406 (BC6)	2	
	2		PACKING GLAND	C3604	1	
2	1		M.SCREW	CAC406 (BC6)	1	

MEASU.	APPROVED K.Koshigoe	CHECKED Y.Kanazawa	SCALE /NT
TREAT. Ni PLATING	DESIGNED N.Akatsuka	DRAWN N.Akatsuka	TYPE SXV-□36LM~□54LM
PROJE.	SHIMADA ELECTRIC CO., LTD.		TITLE FLAMEPROOF TYPE PACKING FLEXIBLE COUPLING
			DRAWING No. HB10127E
			REV. 2