| REV. | RECORD/DATE | BY | APPD. |
|---|---|---|---|
| 1 | CHANGE 58042⇒T58042 MAR.09.2006 | Y.KANAZAWA | K.KOSHIGOE |

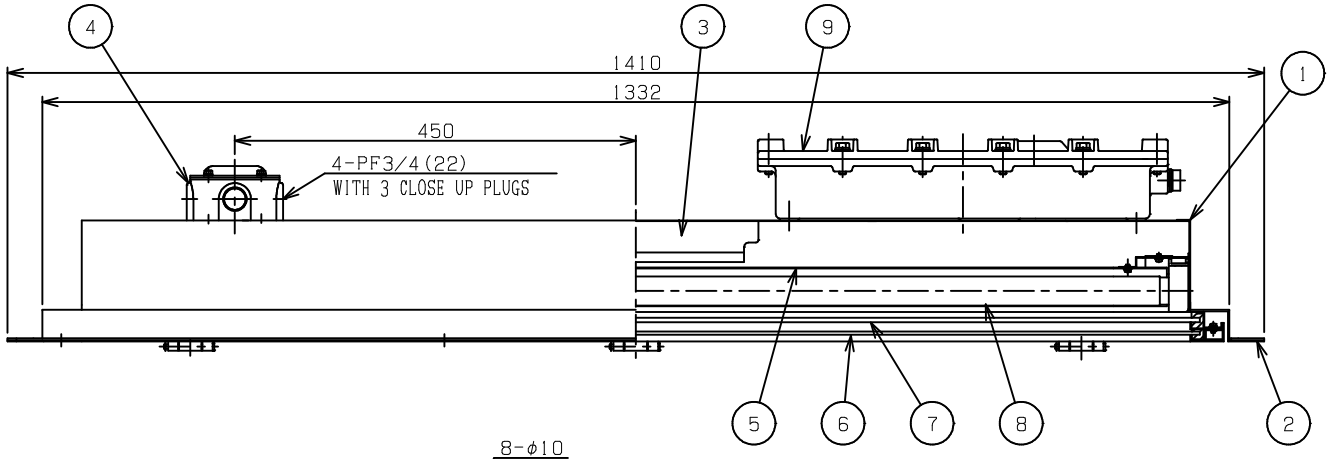


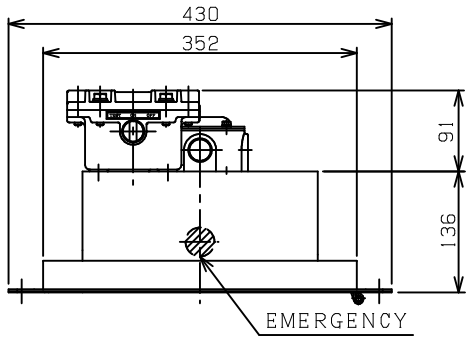


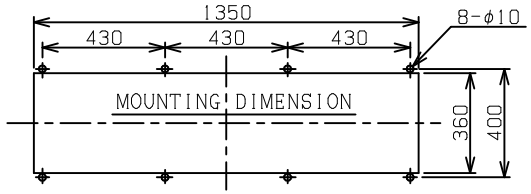


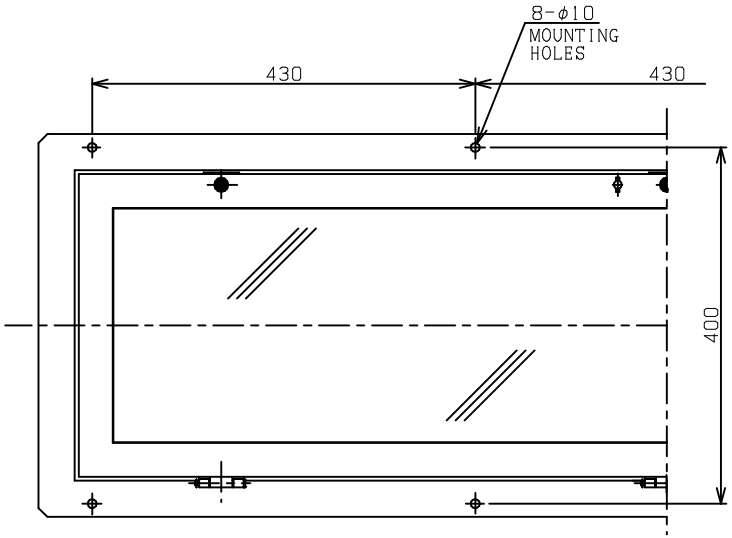


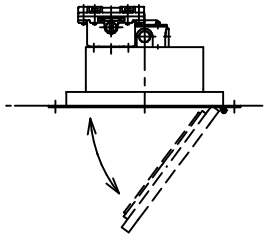

WIRING DIAGRAMS

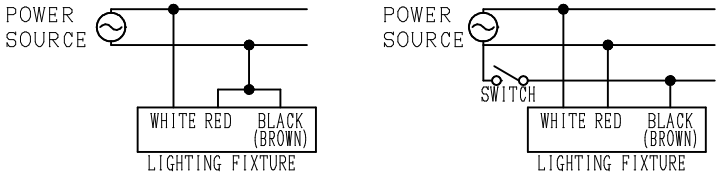


1 CONSTRUCTION ; ed3aG3
CERTIFICATE No. ; T58042
WEIGHT ; 37.5Kg
FINISHED COLOR(MUNSELL)
BODY ; N9.5
REFLECTOR ; N9.5
TERMINAL BOX ; N1.5

EMERGENCY ; CAN BE USE 30 MINUTES
(LUMINOUS FLUX RATIO:50%)

| TYPE | INPUT VOLTAGE(V) | FREQUENCY (Hz) | INPUT CURRENT(A) | INPUT WATTAGE(W) | LAMP |
|---|---|---|---|---|---|
| EFRA-4115E | 100 | 50 | 0.48 | 47 | FLR40SX1 |
| EFRA-4116E | | 60 | | | |
| EFRA-4125E | 200 | 50 | 0.24 | 47 | |
| EFRA-4126E | | 60 | | | |

| PAT.No. | PARTS NAME | MATERIAL | QUANTITY | REMARKS |
|---|---|---|---|---|
| 9 | EMERGENCY ELECTRIC POWER SOURCE | ALUMINIUM ALLOY CASTING | 1 | |
| 8 | LAMP | | 1 | FLR40S |
| 7 | LAMP COVER | TEMPERED GLASS | 1 | t5 |
| 6 | GUARD PANEL | TEMPERED GLASS | 1 | t3.3 |
| 5 | REFLECTOR | STEEL SHEET | 1 | |
| 4 | TERMINAL BOX | ALUMINIUM ALLOY CASTING | 1 | |
| 3 | BALLAST | | | RAPID START TYPE |
| 2 | FRAME | STEEL SHEET | 1 | |
| 1 | BODY | STEEL SHEET | 1 | |

| | | | |
|---|---|---|---|
| APPROVED K.KOSHIGOE MAR.26.2003 | CHECKED K.KOSHIGOE MAR.26.2003 | SCALE 1/6 | TYPE EFRA-41□□E |
| DESIGNED Y.KANAZAWA MAR.26.2003 | DRAWN Y.KANAZAWA MAR.26.2003 | TITLE INCREASED SAFETY TYPE EMERGENCY FLUORESCENT LIGHTING FIXTURE(WITH BATTERY) (40WX1ROW FRONT OPEN TYPE) | |
| SHIMADA ELECTRIC CO., LTD. | | DRAWING No. CH-83441E | REV. 1 |

| REV. | RECORD/DATE | BY | APPD. |
|---|---|---|---|
| 1 | CHANGE 58042⇒T58042 MAR.09.2006 | Y.KANAZAWA | K.KOSHIGOE |

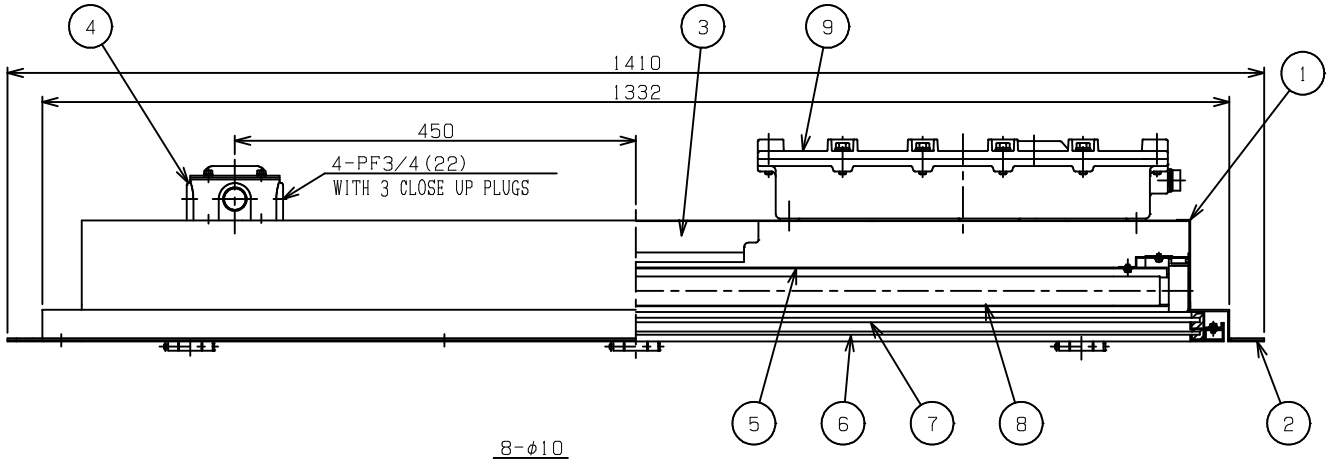


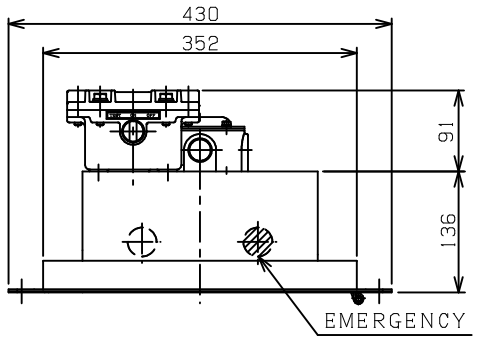


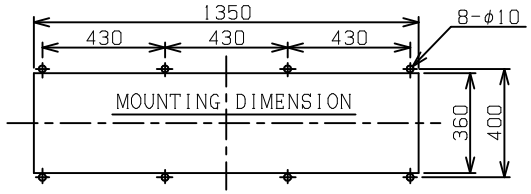


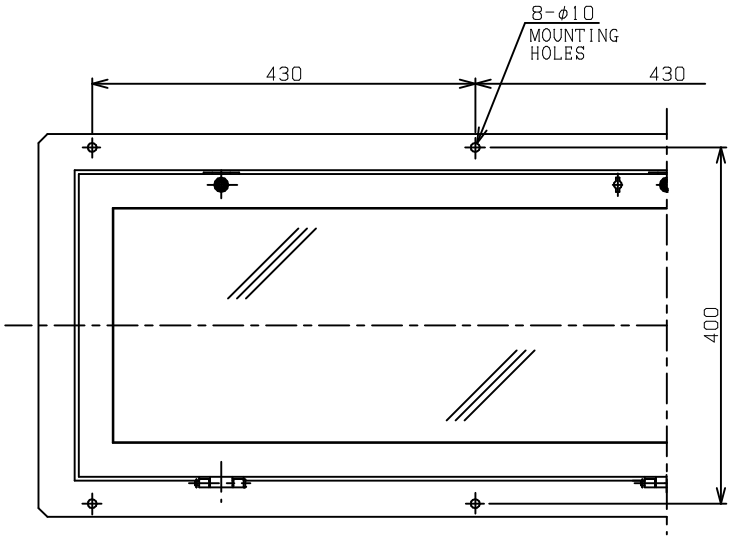


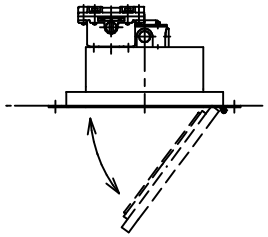

WIRING DIAGRAMS

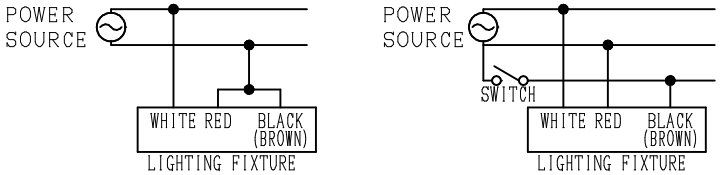


CONSTRUCTION ; ed3aG3
1 CERTIFICATE No. ; T58042
WEIGHT ; 38.0Kg
FINISHED COLOR(MUNSELL)
BODY ; N9.5
REFLECTOR ; N9.5
TERMINAL BOX ; N1.5

EMERGENCY ; CAN BE USE 30 MINUTES
(LUMINOUS FLUX RATIO:50%)

| TYPE | INPUT VOLTAGE(V) | FREQUENCY (Hz) | INPUT CURRENT(A) | INPUT WATTAGE(W) | LAMP |
|---|---|---|---|---|---|
| EFRA-4215E | 100 | 50 | 0.88 | 85 | FLR40SX2 |
| EFRA-4216E | | 60 | | | |
| EFRA-4225E | 200 | 50 | 0.44 | 85 | |
| EFRA-4226E | | 60 | | | |

| PAT.No. | PARTS NAME | MATERIAL | QUANTITY | REMARKS |
|---|---|---|---|---|
| 9 | EMERGENCY ELECTRIC POWER SOURCE | ALUMINIUM ALLOY CASTING | 1 | |
| 8 | LAMP | | 2 | FLR40S |
| 7 | LAMP COVER | TEMPERED GLASS | 1 | t5 |
| 6 | GUARD PANEL | TEMPERED GLASS | 1 | t3.3 |
| 5 | REFLECTOR | STEEL SHEET | 1 | |
| 4 | TERMINAL BOX | ALUMINIUM ALLOY CASTING | 1 | |
| 3 | BALLAST | | | RAPID START TYPE |
| 2 | FRAME | STEEL SHEET | 1 | |
| 1 | BODY | STEEL SHEET | 1 | |

| | | | |
|---|---|---|---|
| APPROVED K.KOSHIGOE OCT.17.2002 | CHECKED T.KATO OCT.17.2002 | SCALE 1/6 | TYPE EFRA-42□□E |
| DESIGNED Y.KANAZAWA OCT.16.2002 | DRAWN Y.KANAZAWA OCT.16.2002 | TITLE INCREASED SAFETY TYPE EMERGENCY FLUORESCENT LIGHTING FIXTURE(WITH BATTERY) (40WX2ROW FRONT OPEN TYPE) | |
| SHIMADA ELECTRIC CO., LTD. | | DRAWING No. CH-83391E | REV. 1 |

| REV. | RECORD/DATE | BY | APPD. |
|---|---|---|---|
| 1 | CHANGE 58042⇒T58042 MAR.09.2006 | Y.KANAZAWA | K.KOSHIGOE |

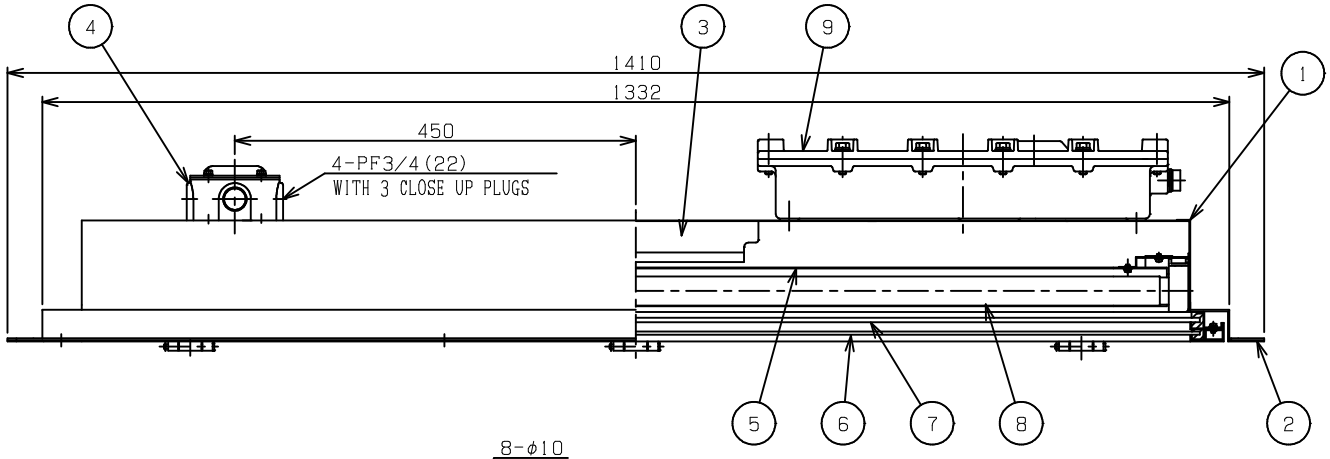


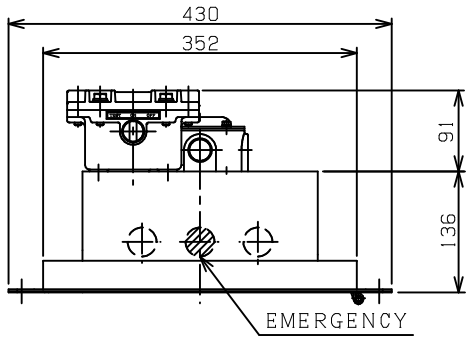


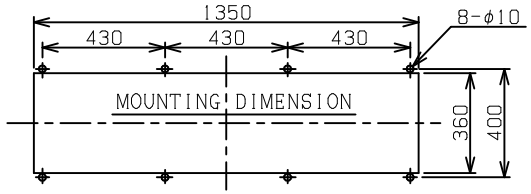


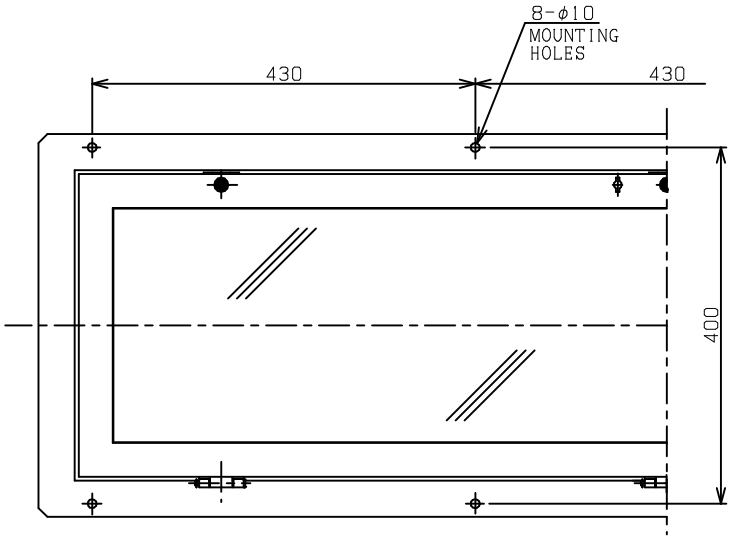


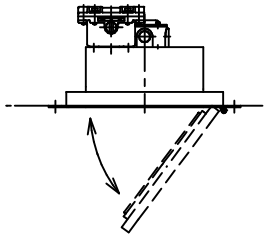

CONSTRUCTION ; ed3aG3
CERTIFICATE No. ; T58042
WEIGHT ; 39.5Kg
FINISHED COLOR(MUNSELL)
BODY ; N9.5
REFLECTOR ; N9.5
TERMINAL BOX ; N1.5

EMERGENCY ; CAN BE USE 30 MINUTES
(LUMINOUS FLUX RATIO:50%)

WIRING DIAGRAMS

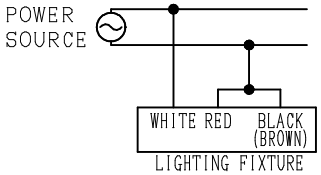


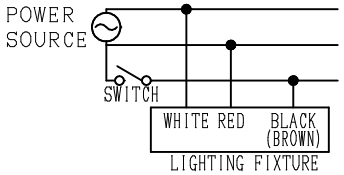


| TYPE | INPUT VOLTAGE(V) | FREQUENCY (Hz) | INPUT CURRENT(A) | INPUT WATTAGE(W) | LAMP |
|---|---|---|---|---|---|
| EFRA-4315E | 100 | 50 | 1.36 | 132 | FLR40SX3 |
| EFRA-4316E | | 60 | | | |
| EFRA-4325E | 200 | 50 | 0.68 | 132 | |
| EFRA-4326E | | 60 | | | |

| PAT.No. | PARTS NAME | MATERIAL | QUANTITY | REMARKS |
|---|---|---|---|---|
| 9 | EMERGENCY ELECTRIC POWER SOURCE | ALUMINIUM ALLOY CASTING | 1 | |
| 8 | LAMP | | 3 | FLR40S |
| 7 | LAMP COVER | TEMPERED GLASS | 1 | t5 |
| 6 | GUARD PANEL | TEMPERED GLASS | 1 | t3.3 |
| 5 | REFLECTOR | STEEL SHEET | 1 | |
| 4 | TERMINAL BOX | ALUMINIUM ALLOY CASTING | 1 | |
| 3 | BALLAST | | | RAPID START TYPE |
| 2 | FRAME | STEEL SHEET | 1 | |
| 1 | BODY | STEEL SHEET | 1 | |

| | | | |
|---|---|---|---|
| APPROVED K.KOSHIGOE MAR.26.2003 | CHECKED K.KOSHIGOE MAR.26.2003 | SCALE 1/6 | TYPE EFRA-43□□E |
| DESIGNED Y.KANAZAWA MAR.26.2003 | DRAWN Y.KANAZAWA MAR.26.2003 | TITLE INCREASED SAFETY TYPE EMERGENCY FLUORESCENT LIGHTING FIXTURE(WITH BATTERY) (40WX3ROW FRONT OPEN TYPE) | |
| SHIMADA ELECTRIC CO., LTD. | | DRAWING No. CH-83328E | REV. 1 |

| REV. | RECORD/DATE | BY | APPD. |
|---|---|---|---|
| 1 | CHANGE 58043⇒T58043 MAR.09.2006 | Y.KANAZAWA | K.KOSHIGOE |

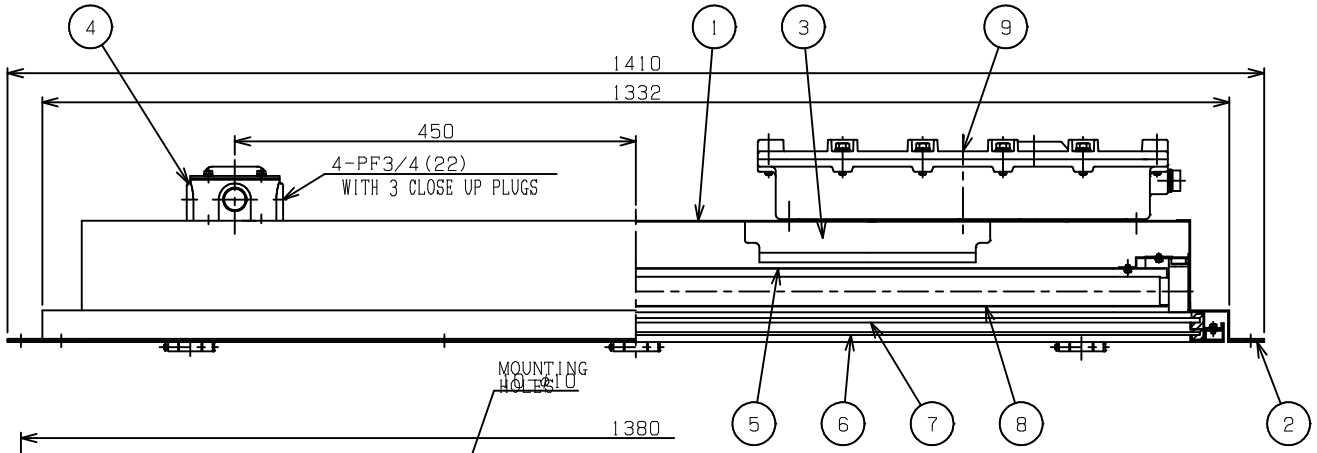


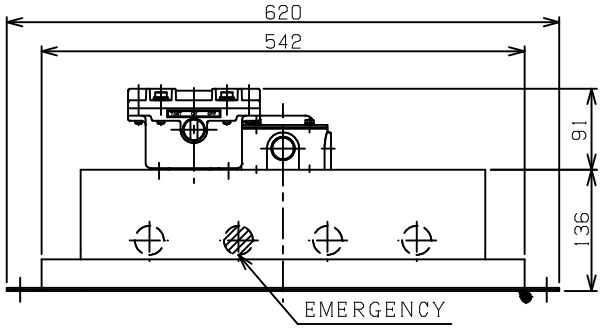


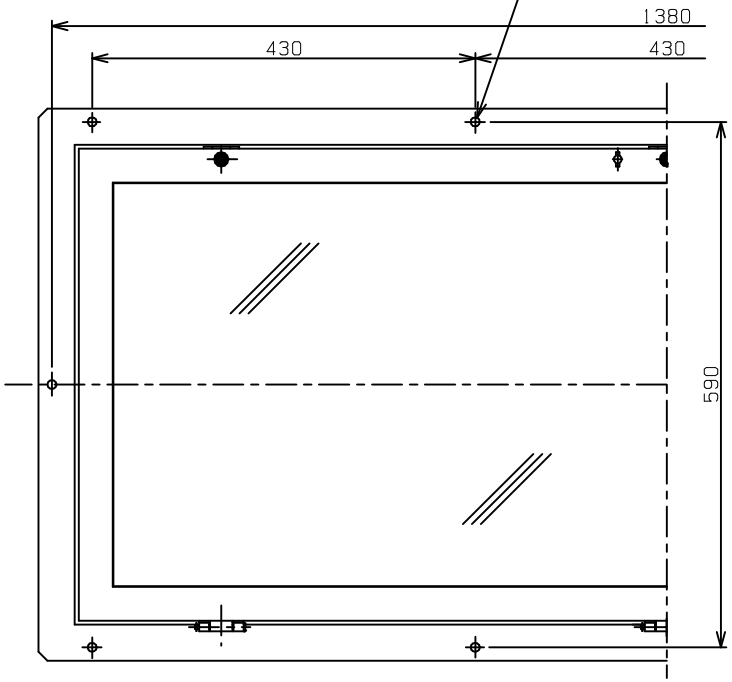


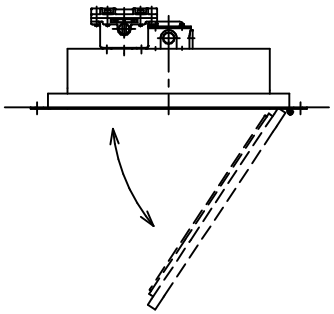

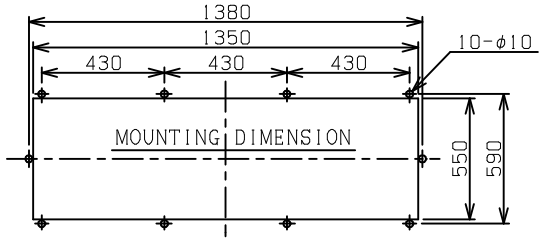


WIRING DIAGRAMS

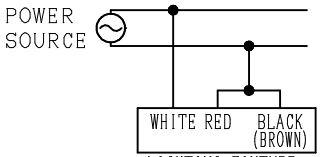


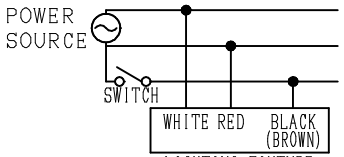


1 CONSTRUCTION ; ed3aG3
CERTIFICATE No. ; T58043
WEIGHT ; 52.0Kg
FINISHED COLOR(MUNSELL)
BODY ; N9.5
REFLECTOR ; N9.5
TERMINAL BOX ; N1.5

EMERGENCY ; CAN BE USE 30 MINUTES
(LUMINOUS FLUX RATIO:50%)

| PAT.No. | PARTS NAME | MATERIAL | QUANTITY | REMARKS |
|---|---|---|---|---|
| 9 | EMERGENCY ELECTRIC POWER SOURCE | ALUMINIUM ALLOY CASTING | 1 | |
| 8 | LAMP | | 4 | FLR40S |
| 7 | LAMP COVER | TEMPERED GLASS | 1 | t5 |
| 6 | GUARD PANEL | TEMPERED GLASS | 1 | t3.3 |
| 5 | REFLECTOR | STEEL SHEET | 1 | |
| 4 | TERMINAL BOX | ALUMINIUM ALLOY CASTING | 1 | |
| 3 | BALLAST | | | RAPID START TYPE |
| 2 | FRAME | STEEL SHEET | 1 | |
| 1 | BODY | STEEL SHEET | 1 | |

| TYPE | INPUT VOLTAGE(V) | FREQUENCY (Hz) | INPUT CURRENT(A) | INPUT WATTAGE(W) | LAMP |
|---|---|---|---|---|---|
| EFRA-4415E | 100 | 50 | 1.76 | 170 | FLR40SX4 |
| EFRA-4416E | | 60 | | | |
| EFRA-4425E | 200 | 50 | 0.88 | 170 | |
| EFRA-4426E | | 60 | | | |

| | | | |
|---|---|---|---|
| APPROVED K.KOSHIGOE MAR.26.2003 | CHECKED K.KOSHIGOE MAR.26.2003 | SCALE 1/6 | TYPE EFRA-44□□E |
| DESIGNED Y.KANAZAWA MAR.26.2003 | DRAWN Y.KANAZAWA MAR.26.2003 | TITLE INCREASED SAFETY TYPE EMERGENCY FLUORESCENT LIGHTING FIXTURE(WITH BATTERY) (40WX4ROW FRONT OPEN TYPE) | |
| SHIMADA ELECTRIC CO., LTD. | | DRAWING No. CH-83442E | REV. 1 |

| REV. | RECORD/DATE | BY | APPD. |
|---|---|---|---|
| 1 | CHANGE 58043⇒T58043 MAR.09.2006 | Y.KANAZAWA | K.KOSHIGOE |

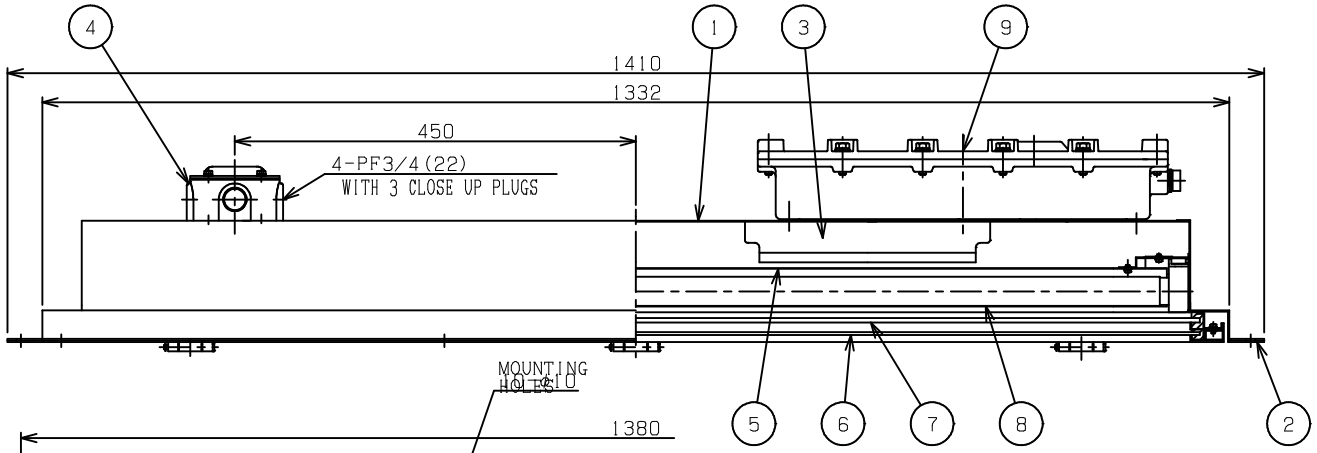


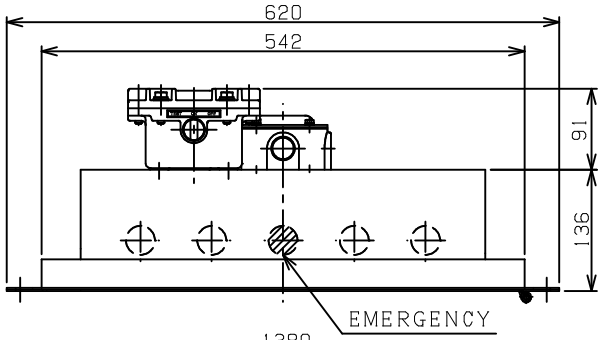


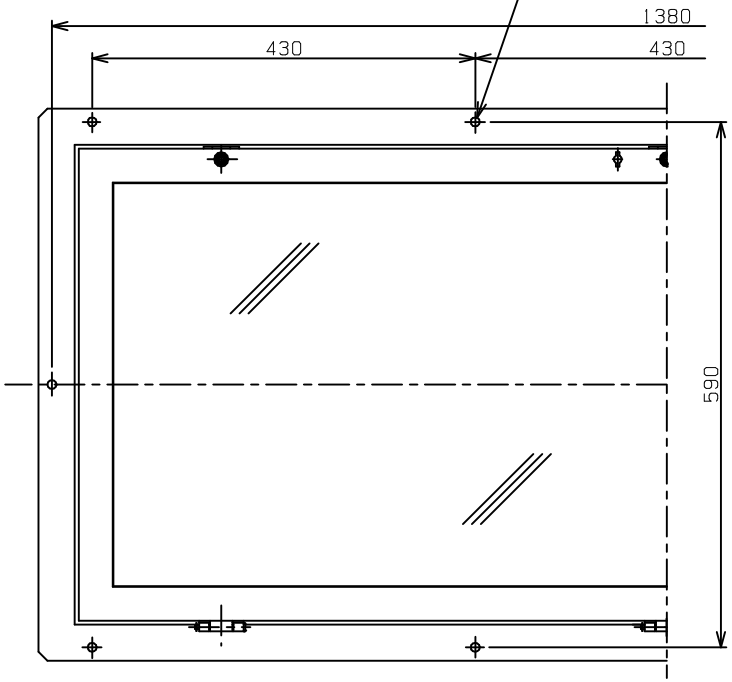


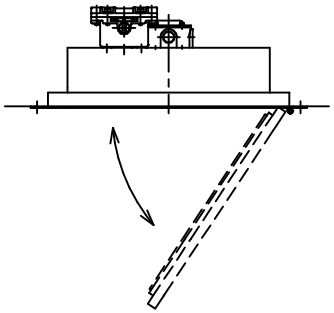

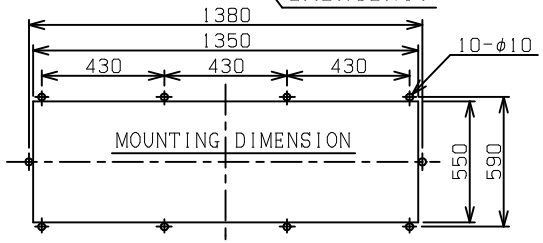


WIRING DIAGRAMS

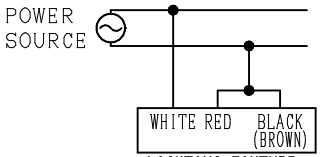


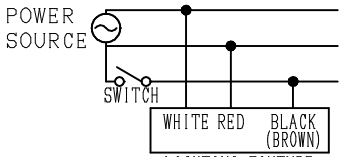


1 CONSTRUCTION ; ed3aG3
CERTIFICATE No. ; T58043
WEIGHT ; 53.5Kg
FINISHED COLOR(MUNSELL)
BODY ; N9.5
REFLECTOR ; N9.5
TERMINAL BOX ; N1.5

EMERGENCY ; CAN BE USE 30 MINUTES
(LUMINOUS FLUX RATIO:50%)

| TYPE | INPUT VOLTAGE(V) | FREQUENCY (Hz) | INPUT CURRENT(A) | INPUT WATTAGE(W) | LAMP |
|---|---|---|---|---|---|
| EFRA-4515E | 100 | 50 | 2.24 | 217 | FLR40SX5 |
| EFRA-4516E | | 60 | | | |
| EFRA-4525E | 200 | 50 | 1.12 | 217 | |
| EFRA-4526E | | 60 | | | |

| PAT.No. | PARTS NAME | MATERIAL | QUANTITY | REMARKS |
|---|---|---|---|---|
| 9 | EMERGENCY ELECTRIC POWER SOURCE | ALUMINIUM ALLOY CASTING | 1 | |
| 8 | LAMP | | 5 | FLR40S |
| 7 | LAMP COVER | TEMPERED GLASS | 1 | t5 |
| 6 | GUARD PANEL | TEMPERED GLASS | 1 | t3.3 |
| 5 | REFLECTOR | STEEL SHEET | 1 | |
| 4 | TERMINAL BOX | ALUMINIUM ALLOY CASTING | 1 | |
| 3 | BALLAST | | | RAPID START TYPE |
| 2 | FRAME | STEEL SHEET | 1 | |
| 1 | BODY | STEEL SHEET | 1 | |

| | | | |
|---|---|---|---|
| APPROVED K.KOSHIGOE MAR.26.2003 | CHECKED K.KOSHIGOE MAR.26.2003 | SCALE 1/6 | TYPE EFRA-45□□E |
| DESIGNED Y.KANAZAWA MAR.26.2003 | DRAWN Y.KANAZAWA MAR.26.2003 | TITLE INCREASED SAFETY TYPE EMERGENCY FLUORESCENT LIGHTING FIXTURE(WITH BATTERY) (40WX5ROW FRONT OPEN TYPE) | |
| SHIMADA ELECTRIC CO., LTD. | | DRAWING No. CH-83443E | REV. 1 |

| REV. | RECORD/DATE | BY | APPD. |
|---|---|---|---|
| 1 | CHANGE 58043⇒T58043 MAR.09.2006 | Y.KANAZAWA | K.KOSHIGOE |

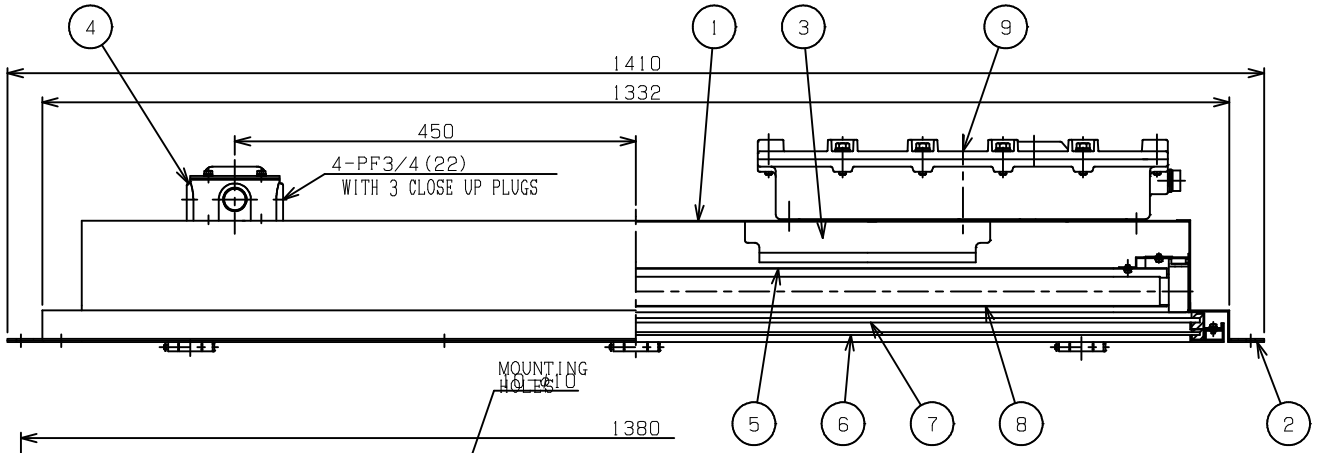


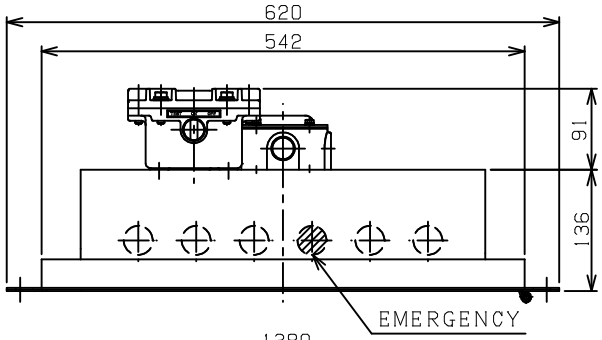


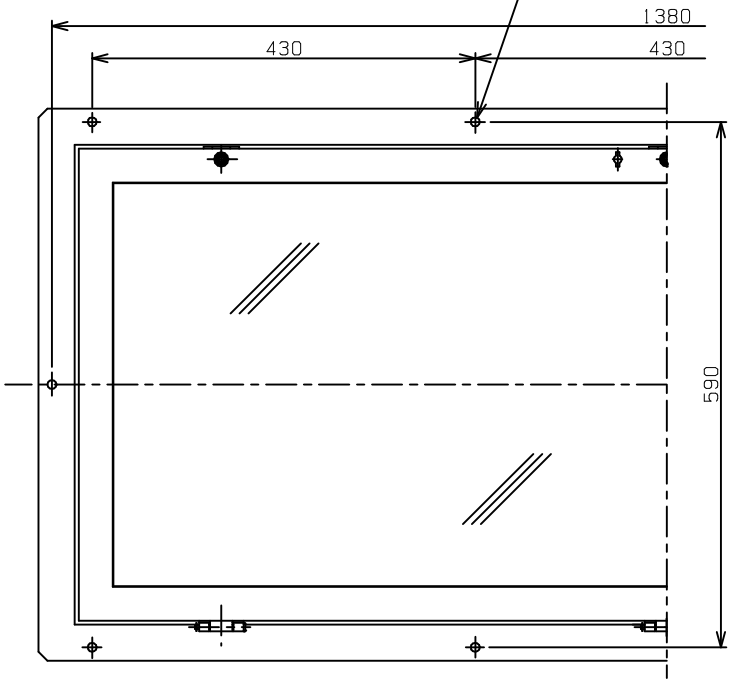


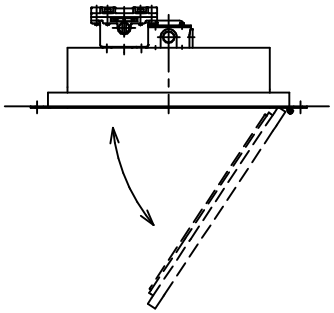

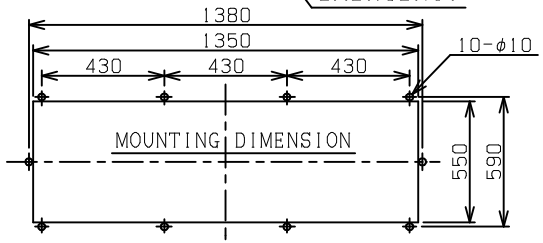


WIRING DIAGRAMS

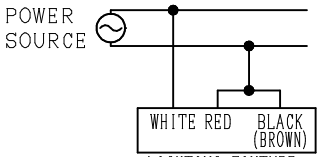


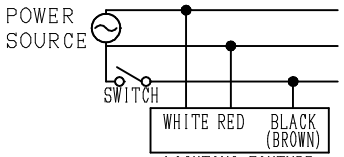


1 CONSTRUCTION ; ed3aG3
CERTIFICATE No. ; T58043
WEIGHT ; 55.0Kg
FINISHED COLOR(MUNSELL)
BODY ; N9.5
REFLECTOR ; N9.5
TERMINAL BOX ; N1.5

EMERGENCY ; CAN BE USE 30 MINUTES
(LUMINOUS FLUX RATIO:50%)

| PAT.No. | PARTS NAME | MATERIAL | QUANTITY | REMARKS |
|---|---|---|---|---|
| 9 | EMERGENCY ELECTRIC POWER SOURCE | ALUMINIUM ALLOY CASTING | 1 | |
| 8 | LAMP | | 6 | FLR40S |
| 7 | LAMP COVER | TEMPERED GLASS | 1 | t5 |
| 6 | GUARD PANEL | TEMPERED GLASS | 1 | t3.3 |
| 5 | REFLECTOR | STEEL SHEET | 1 | |
| 4 | TERMINAL BOX | ALUMINIUM ALLOY CASTING | 1 | |
| 3 | BALLAST | | | RAPID START TYPE |
| 2 | FRAME | STEEL SHEET | 1 | |
| 1 | BODY | STEEL SHEET | 1 | |

| TYPE | INPUT VOLTAGE(V) | FREQUENCY (Hz) | INPUT CURRENT(A) | INPUT WATTAGE(W) | LAMP |
|---|---|---|---|---|---|
| EFRA-4615E | 100 | 50 | 2.64 | 255 | FLR40SX6 |
| EFRA-4616E | | 60 | | | |
| EFRA-4625E | 200 | 50 | 1.32 | 255 | |
| EFRA-4626E | | 60 | | | |

| | | | |
|---|---|---|---|
| APPROVED K.KOSHIGOE OCT.17.2002 | CHECKED T.KATO OCT.17.2002 | SCALE 1/6 | TYPE EFRA-46□□E |
| DESIGNED Y.KANAZAWA OCT.16.2002 | DRAWN Y.KANAZAWA OCT.16.2002 | TITLE INCREASED SAFETY TYPE EMERGENCY FLUORESCENT LIGHTING FIXTURE(WITH BATTERY) (40WX6ROW FRONT OPEN TYPE) | |
| SHIMADA ELECTRIC CO., LTD. | | DRAWING No. CH-83392E | REV. 1 |